FILTRA VIBRACIÓN

ARES FML-2000

LABORATORY GRINDING MILL

ARES FML-2000

Hammer grinding mill designed for the milling of a great variety of solid products: wheat, plastics, resins, minerals, vegetable matter, etc. Designed for laboratories in the food, chemicals, pharmaceuticals and ceramics industries.

The drum, together with the anti-wear stainless steel blades, allow the fast milling of a multitude of semi-hard and hard products with an input particle size of + or - 20 mm.

The screens have round perforations, ranging from Ø 0.5 to 5 mm. The screen is easily changed, which optimizes the equipment preparation time.

The ring gear and hammers are manufacture from AISI-431 stainless steel tempered.

It incorporates a frequency converter which allows the starting and stopping of the motor without sudden movements.

INCLUDES:

- Hammer grinding mill
- Interchangeable screen
- Connecting cable
- Tray of methacrylate
- User manual
- CE declaration of conformity

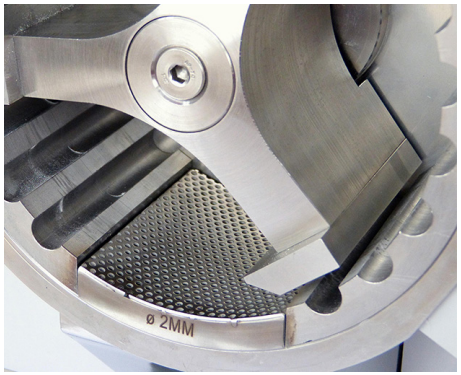

TECHNICAL FEATURES

Speed: 3000 rpm

Grinding chamber volume: : 1.2 l

Collector capacity: 2 l

Sieve sizes (ømm):

0.5, 0.8, 1, 1.5, 2, 2.5, 3, 4, 5, 6.

Maximum particle feed size: 20 mm.

Voltage: 220/240 V - 50/60 Hz.

Power: 1.5 kW.

Weight: 55 kg.

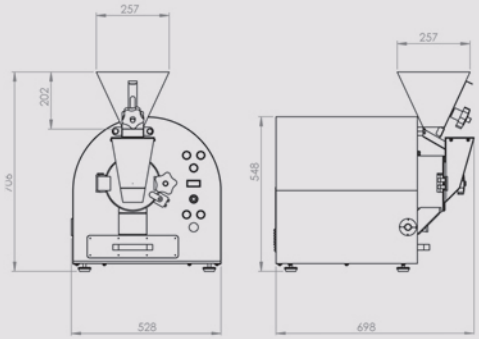

CE

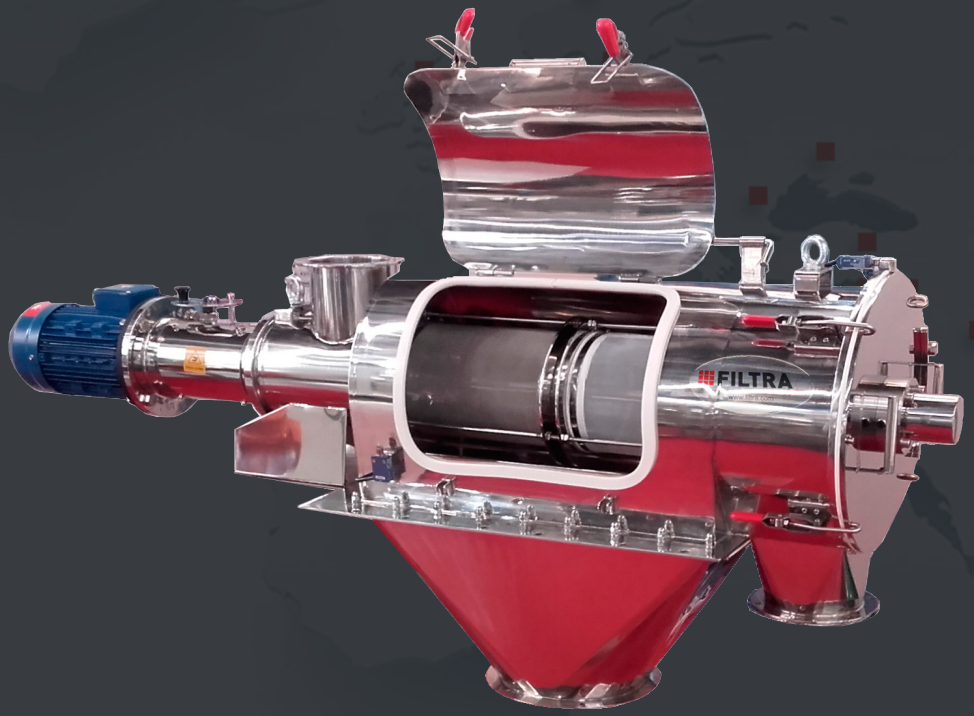

SIEVING FOR LABORATORY AND INDUSTRIAL PROCESSES

FILTRA VIBRACIÓN

Filtra Vibración S.L

C/ BRONZE, 1-3, P.I. LES GUIXERES
08915 BADALONA (BARCELONA)

filtra@filtra.com
filtra.com